Embedded Systems & IoT April -July 2026

Lab Exercise: Schematics with ESP32

Krishna Madhaparia 166980

ICS 4E

Instructions:

For this exercise, you will largely use the EasyEDA software for circuit design. In part A, you can write the results of your calculations to a suitable document and export it as a PDF. For part B, export the designs directly from EasyEDA as PDF documents.

Part A

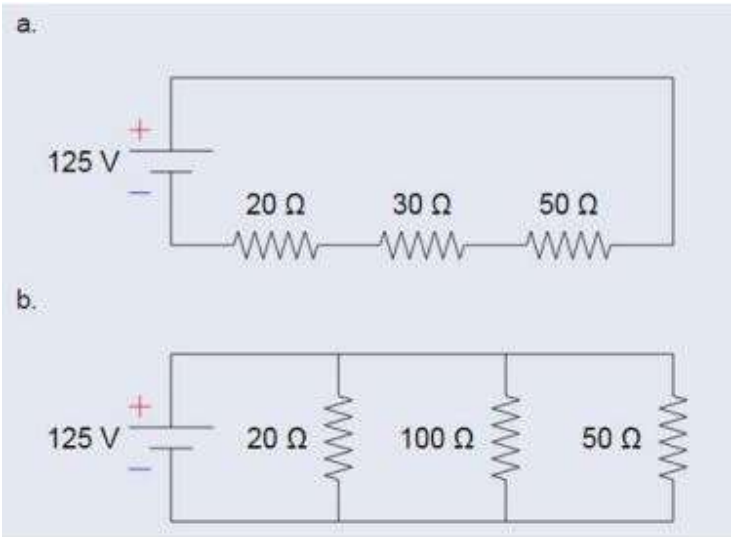

For each of these circuits:

1. Calculate the total resistance in ohms,

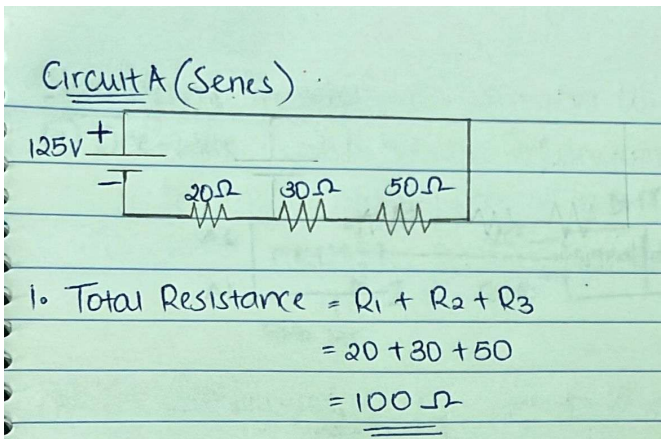

Circuit B (Parallel)

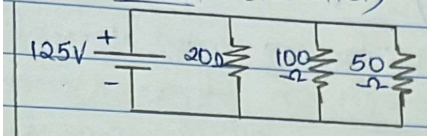

1. Total Resistance, $\frac{1}{TR} = \frac{1}{R_1} + \frac{1}{R_2} + \frac{1}{R_3}$

$$\frac{1}{TR} = \frac{1}{20} + \frac{1}{100} + \frac{1}{50} = \frac{2}{25}$$

$$TR = \frac{1}{2/25} = \underline{\underline{12.5\,\Omega}}$$

2. Calculate the total current from the power supply,
Circuit A:

2. $I = \frac{V}{A} = \frac{125V}{100\Omega} = \underline{\underline{1.25A}}$

Circuit B:

2. $I = \frac{V}{A} = \frac{125V}{12.5\Omega} = \underline{\underline{10A}}$

3. Calculate the current through each resistor

Circuit A:

3. In Series Circuits, the current is same everypoint so 1.25A ~~at~~ in all resistors.

$$I_1 = I_2 = I_3 = 1.25A$$

Circuit B:

3. In Parallel Circuit, the current is not the same at all points but the ~~total~~ ~~Current~~ adds up to the Total current which is 10A.

$$I_1 = \frac{125}{20} = 6.25A$$

$$I_2 = \frac{125}{100} = 1.25A$$

$$I_3 = \frac{125}{50} = 2.5A$$

$$6.25 + 1.25 + 2.5 \Rightarrow 10A$$

4. Calculate the Voltage drop through each resistor

Circuit A:

4. $V = I \times R$.

$$\left.\begin{aligned} V_1 &= 1.25 \times 20 = 25V \\ V_2 &= 1.25 \times 30 = 37.5V \\ V_3 &= 1.25 \times 50 = 62.5V \end{aligned}\right\} \Rightarrow 125V$$

In series the Voltage is different at all points of the circuit.

Circuit B:

4. In Parallel, the voltage is same at all points so each resistor ~~to~~ ~~has~~ will have voltage of 125V.

$$V_1 = V_2 = V_3 = 125V$$

5. Calculate the Power dissipated through each resistor (use Watt's Law: Power = Voltage * Current)

Circuit A:

5. $P = V \times I$

$P_1 = 25 \times 1.25 = 31.25W$

$P_2 = 37.5 \times 1.25 = 46.875W$

$P_3 = 62.5 \times 1.25 = 78.125W$

Circuit B:

5. $P_t = V \times I$

$P_1 = 125 \times 6.25 = 781.25W$

$P_2 = 125 \times 1.25 = 156.25W$

$P_3 = 125 \times 2.5 = 312.5W$